Section 8

Tyne Units

[1] Janke (Australia) reserves the right to alter the pricing of any of its products without notice.

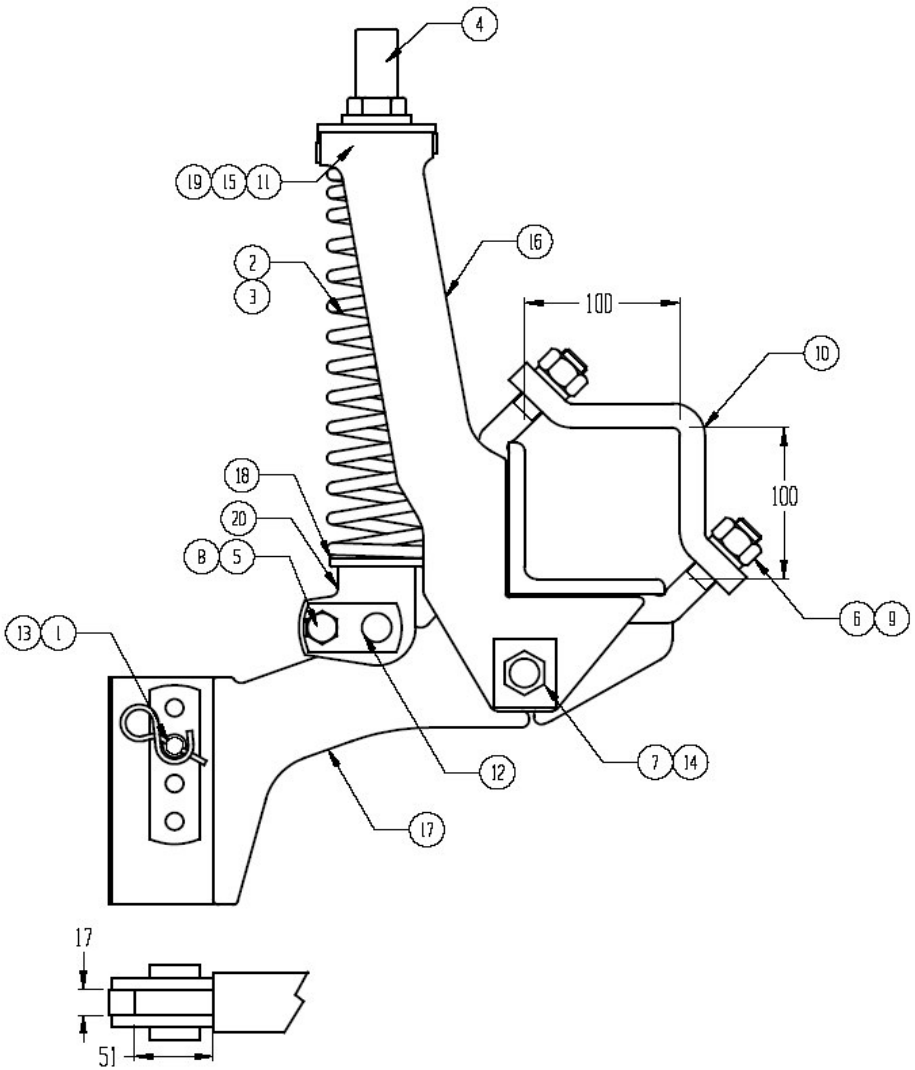

CADKEY PRT.No.	2200 - 001
SUPERSEDES	-
SUPERSEDED BY	-
REV.	—
TITLE	TYNE UNIT F400
	SPRING RELEASE 100mm BEAM
	SUIT 50 x 16 TYNE
DWN.: G.S.	DATE: 25 Oct 02
FIRST USED ON	-
(ASSY) PART No.AS DWN	-
(ASSY) PART No.OPP HAND	-
JOB No.	-
REF.No	-
CLIENT	-
CHK:	
THIS DRAWING IS THE PROPERTY OF	JANKE MOUNT TYSON QLD. AUSTRALIA
SHEET	1 OF 1
APPROVED	
SCALE:	NON STANDARD
TYPE	—
SIZE	A3

No.	PART No.	MATERIAL / DESCRIPTION	MATERIAL / GRADE	QTY
1	1052-5D1	CLIP TWIST, 4 x 62, 42/30°	-	1
2	1100-1D1	SPRING - INNER F400	-	1
3	1100-1D2	SPRING - OUTER F400	-	1
4	1601-0D1	CAP, THREAD PROTECTING - F400	-	1
5	1821-81E6	SET SCREW ZP 1/2 UNC X 3/4	-	+
6	1N11-81H	NUT ZP 3/4"*UNC	-	4
7	1N31-81H	NUT NYLOC ZP 3/4"*UNC	-	2
8	1W70-11E	WASHER SPRING MED ZP 1/2	-	1
9	1W80-11H	WASHER SPRING HEAVY ZP 3/4"	-	4
10	2101-016	DIAG CLAMP 90/100 RHS 3/4 HOLE	-	2
11	2115-1D1	BUSH SPR LOCATOR F400	-	1
12	2117-5D5	PIVOT PIN F400 SPRING PIVOT	-	1
13	2118-1D5	PIN CLEVIS G85 ZP 7/16" X 85MM	-	1
14	2118-5D4	PIVOT BOLT ASSY, 3/4" x 155MM SS	-	1
15	2140-0D3	WASHER F400 TYNE	-	1
16	2200-1D1	SPR RELEASE BKT F400 100MM BEAM	-	1
17	2200-1D4	TYNE HD F400 PIN ADJ WITH BUSHES	-	1
18	2200-112	RETAINING WASHER	-	1
19	2200-113	ROCKING PLATE F400	-	1
20	2201-308	PUSHROD F400/300	-	1

CADKEY PRT.No. 2200 - 001

UNLESS OTHERWISE SPECIFIED TOLERANCES

FABRICATION ANGULAR +/- 1° HOLE CRS +/- 0.5 DIM. +/- 1

MACHINING ANGULAR +/- 0.05° DIM. +/- 0.05 FINISH 6.4uM

UNLESS OTHERWISE SPECIFIED MATERIAL - STEEL TO:

AS3678/250 - (MS) PLATE/BAR/Etc AS1163/350/C350 - RHS/SHS

AS1074 - (NB) NOMINAL BORE PIPE AS1442/EN - 14A (HB) HOLLOW BAR

REV.	ZONE	DESCRIPTION	BY	DATE	REV.	ZONE	DESCRIPTION	BY	DATE
-	-	-	-	-	-	-	-	-	-
-	-	-	-	-	-	-	-	-	-

Price List for F400 Tyne Unit 2200-001

Individual Components:

No.	Part No.	Description	Qty.
1	1052-501	CLIP TWIST, 4 X 62mm	1
2	1100-101	SPRING - INNER F400	1
3	1100-102	SPRING - OUTER F400	1
4	1601-001	CAP, THREAD PROTECTING - F400	1
5	1B21-81E6	SET SCREW ZP 1/2 UNC X 3/4"	1
6	1N11-81H	NUT ZP 3/4"UNC	4
7	1N31-81H	NUT NYLOC ZP 3/4"UNC	1
8	1W70-11E	WASHER SPRING MED ZP 1/2"	1
9	1W80-11H	WASHER SPRING HEAVY ZP 3/4"	4
10	2101-016	DIAGONAL CLAMP 90/100 RHS 3/4 HOLE X 40	2
11	2115-101	BUSH SPR LOCATOR MODEL 1 F400 MOLY FILLED NYLON (LUBRON)	1
12	2117-505	PIN SPRING PIVOT F400	1
13	2118-105	PIN CLEVIS GR5 ZP 7/16" DIA X 85mm SUIT UP TO F400	1
14	2118-504	PIVOT BOLT ASSY, 3/4" X 155MM SS F400	1
15	2140-003	WASHER F400 TYNE	1
16	2200-101	SPRING TOWER F400 100MM BEAM	1
17	2200-104	TYNE HD F400 PIN ADJ WITH BUSHES	1
18	2200-112	RETAINING WASHER	1
19	2200-113	ROCKING PLATE F400	1
20	2201-308	PUSHROD F400/300	1

[2] Janke (Australia) reserves the right to alter the pricing of any of its products without notice.

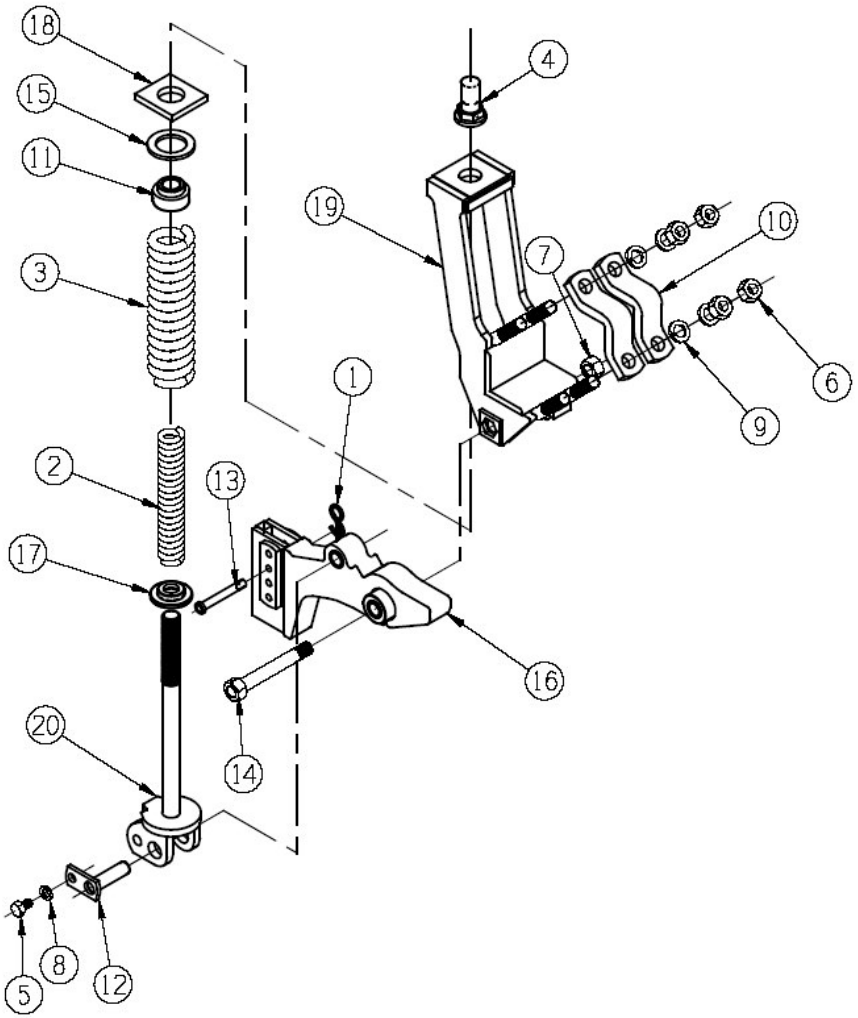

No.	PART No.	TITLE / DESCRIPTION, REFERENCE	MATERIAL / GRADE	QTY
20	2201-308	PUSHROD F400/500	-	1
19	2201-113	SPR RELEASE BRKT F400 75mm BEAM	-	1
18	2200-113	ROCKING PLATE F400	-	1
17	2200-112	RETAINING WASHER	-	1
16	2200-104	TYNE HEAD F400 PIN ADJ BUSHED	-	1
15	2140-003	WASHER F400 TYNE	-	1
14	2118-504	PIVOT BOLT ASSY, 3/4" x 155mm SS	-	1
13	2118-105	CLEVIS PIN GR5 ZP 7/16" x 85mm	-	1
12	2117-505	PIVOT PIN F400 SPRING PIVOT	-	1
11	2115-101	BUSH SPR LOCATOR F400	-	1
10	2101-015	DIAG CLAMP 65/75 RHS, 3/4" HOLE	-	2
9	1W80-11H	WASHER SPRING HEAVY 3/4"	-	4
8	1W70-11E	WASHER SPRING MED ZP 1/2"	-	1
7	1N31-81H	NUT NYLOC ZP 3/4" UNC	-	1
6	1N11-81H	NUT ZP 3/4" UNC	-	4
5	1B21-81E6	SET SCREW ZP 1/2" UNC x 3/4"	-	1
4	1601-001	THREAD PROTECTOR CAP - F400	-	1
3	1100-102	SPRING - OUTER F400	-	1
2	1100-101	SPRING - INNER F400	-	1
1	1052-501	CLIP TWIST, 4 x 62, 42/30°	-	1

CHK:	REF No.	FIRST USED ON	(ASSY) PRT No. AS DRN	(ASSY) PRT No.OPP HND
	-	-	-	

DRN: BKB
DATE : 9/8/05
SUPERSEDES -

THIS DRAWING IS THE PROPERTY OF
Janke
MOUNT TYSON QLD.AUSTRALIA
PH. 07-46 93 71 88
FX. 07-46 93 71 85
E-m. >info@janke.com.au

TITLE
TYNE UNIT F400

SPRING RELEASE 75mm BEAM
SUITS 50 x 16mm TYNE

PRT.No. **2200-002**
SIZE **A 4L**

APPROVED: | 1 - | SCALE: NON STANDARD | TYPE - | REV. -

REV.	ZONE	DESCRIPTION OF CHANGE	BY	DATE
-	-	-	-	-

MAX.- MIN.- MAX.- MIN.-

TOLERANCES UNLESS SPECIFIED

MACHINING		FABRICATION	
DIM.	+/- 0.05	DIM.	+/- 1
ANGULAR	+/- 0.05°	ANGULAR	+/- 1°
FINISH	6.4uM	HOLE CRS	+/- 0.5

UNLESS SPECIFIED
MATERIAL - STEEL TO:
AS3678/250 - (MS) PLATE/BAR/Etc
AS1163/350/C350 - RHS/SHS
AS1074 - (NB) NOMINAL BORE PIPE
AS1442/EN - 14A (HB) HOLLOW BAR

Price List for F400 Tyne Unit 2200-002

Individual Components:

No.	Part No.	Description	Qty.
1	1052-501	CLIP TWIST, 4 X 62mm	1
2	1100-101	SPRING - INNER F400	1
3	1100-102	SPRING - OUTER F400	1
4	1601-001	CAP, THREAD PROTECTING - F400	1
5	1B21-81E6	SET SCREW ZP 1/2 UNC X 3/4"	1
6	1N11-81H	NUT ZP 3/4"UNC	4
7	1N31-81H	NUT NYLOC ZP 3/4"UNC	1
8	1W70-11E	WASHER SPRING MED ZP 1/2"	1
9	1W80-11H	WASHER SPRING HEAVY ZP 3/4"	4
10	2101-015	DIAGONAL CLAMP 65/75 RHS 3/4 HOLE X 40	2
11	2115-101	BUSH SPR LOCATOR MODEL 1 F400 MOLY FILLED NYLON (LUBRON)	1
12	2117-505	PIN SPRING PIVOT F400	1
13	2118-105	PIN CLEVIS GR5 ZP 7/16" DIA X 85mm SUIT UP TO F400	1
14	2118-504	PIVOT BOLT ASSY, 3/4" X 155MM SS F400	1
15	2140-003	WASHER F400 TYNE	1
16	2201-113	SPRING RELEASE BKT F400 75mm BEAM	1
17	2200-104	TYNE HD F400 PIN ADJ WITH BUSHES	1
18	2200-112	RETAINING WASHER	1
19	2200-113	ROCKING PLATE F400	1
20	2201-308	PUSHROD F400/300	1

[3] Janke (Australia) reserves the right to alter the pricing on any of its products without notice.

CADKEY PRT.No.	2200 - 004	SUPERSEDES - / SUPERSEDED BY -	REV. —

TITLE: TYNE UNIT F400 — SPRING RELEASE 75mm BEAM — SUIT 50 x 16 TYNE

DRN.: S.S.	DATE: 29-4-03	FIRST USED ON -	(ASSY) PART No. AS DRN -	(ASSY) PART No. OPP HAND -
JOB No. -	REF.No -	THIS DRAWING IS THE PROPERTY OF JANKE MOUNT TYSON QLD.AUSTRALIA		
CLIENT -	CHK:			
SHEET 1 OF 1	APPROVED	SCALE: NON STANDARD	TYPE —	SIZE A3

No.	PART No.	MATERIAL / DESCRIPTION	MATERIAL / GRADE	QTY
1	1052-501	CLIP TWIST, 4 x 62, 42/30°	-	2
2	1100-101	SPRING - INNER F400	-	1
3	1100-102	SPRING - OUTER F400	-	1
4	1601-001	CAP, THREAD PROTECTING - F400	-	1
5	1621-8165	SET SCREW ZP 1/2 UNC X 3/4	-	1
6	1N11-81H	NUT ZP 3/4"UNC	-	4
7	1N31-81H	NUT NYLOC ZP 3/4"UNC	-	2
8	1W70-11E	WASHER SPRING MED ZP 1/2	-	1
9	1W80-11H	WASHER SPRING HEAVY ZP 3/4"	-	4
10	2101-015	DIAG CLAMP 65/75 RHS 3/4 HOLE	-	2
11	2115-101	BUSH SPR LOCATOR F400	-	1
12	2117-505	PIVOT PIN F400 SPRING PIVOT	-	1
13	2118-105	PIN CLEVIS GR5 ZP 7/16" X 89MM	-	2
14	2118-504	PIVOT BOLT ASSY, 3/4" x 159MM SS	-	1
15	2140-003	WASHER F400 TYNE	-	1
16	2201-113	SPR RELEASE BKT F400 75mm BEAM	-	1
17	2201-214	TYNE HD F400 PIN ADJ WITH BUSHES	-	1
18	2200-112	RETAINING WASHER	-	1
19	2200-113	ROCKING PLATE F400	-	1
20	2201-308	PUSHROD F400/300	-	1

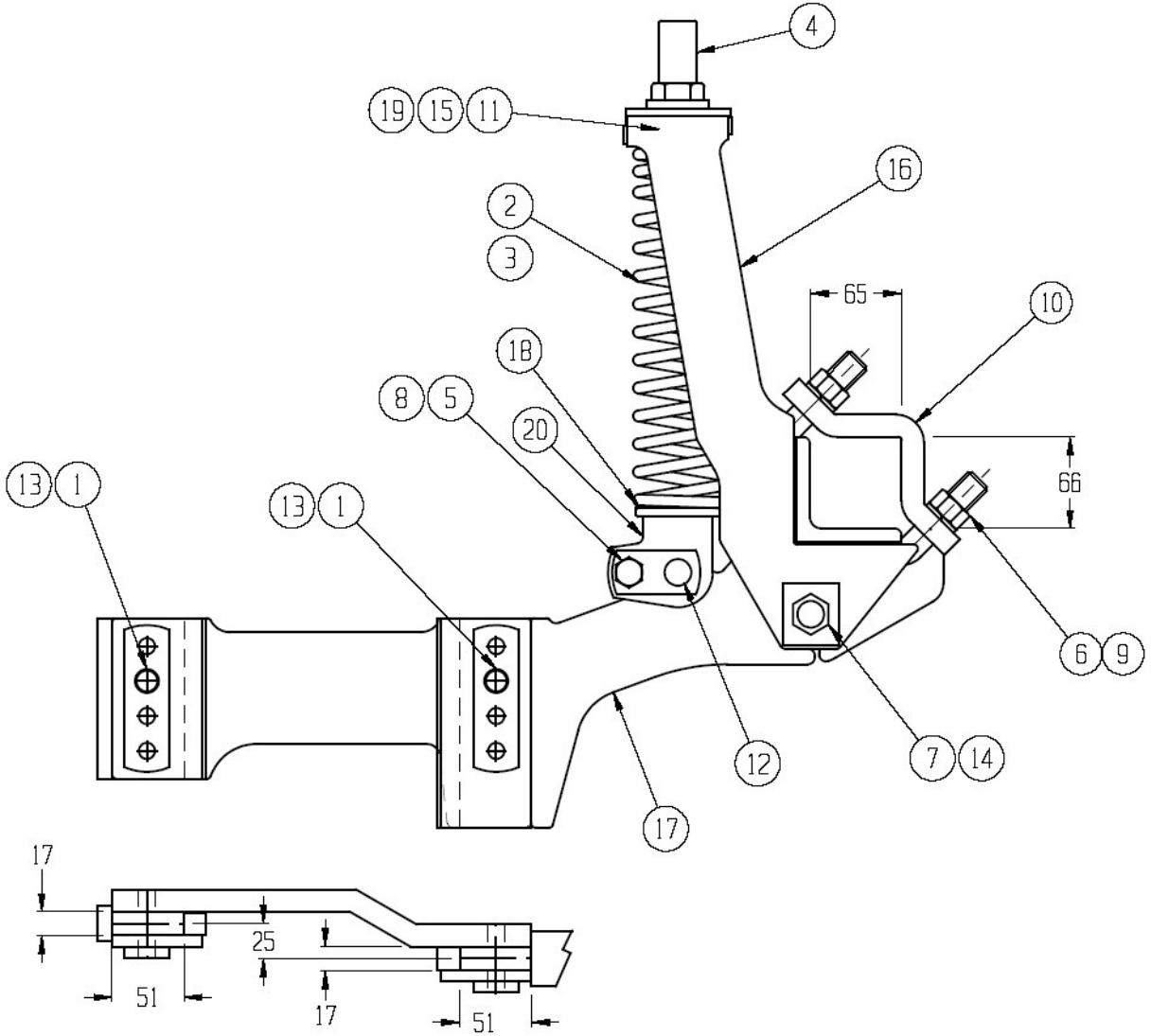

CADKEY PRT.No. 2200 - 004

UNLESS OTHERWISE SPECIFIED TOLERANCES

FABRICATION: ANGULAR +/- 1° — DIM. +/- 1 — HOLE CRS +/- 0.5

MACHINING: ANGULAR +/- 0.05° — DIM. +/- 0.05 — FINISH 6.4uM

UNLESS OTHERWISE SPECIFIED MATERIAL - STEEL TO:

AS3678/250 - (MS) PLATE/BAR/Etc — AS1074 - (NB) NOMINAL BORE PIPE

AS1163/350/C350 - RHS/SHS — AS1442/EN - 14A (HB) HOLLOW BAR

REV.	ZONE	DESCRIPTION	BY	DATE	REV.	ZONE	DESCRIPTION	BY	DATE
-	-	-	-	-	-	-	-	-	-
-	-	-	-	-	-	-	-	-	-

Price List for Tyne Unit F400
2200-004

Individual Components:

No.	Part No.	Description	Qty.
1	1052-501	CLIP TWIST, 4 X 62mm	2
2	1100-101	SPRING - INNER F400	1
3	1100-102	SPRING - OUTER F400	1
4	1601-001	CAP, THREAD PROTECTING - F400	1
5	1B21-81E6	SET SCREW ZP 1/2 UNC X 3/4"	1
6	1N11-81H	NUT ZP 3/4"UNC	4
7	1N31-81H	NUT NYLOC ZP 3/4"UNC	1
8	1W70-11E	WASHER SPRING MED ZP 1/2"	1
9	1W80-11H	WASHER SPRING HEAVY ZP 3/4"	4
10	2101-016	DIAGONAL CLAMP 90/100 RHS 3/4 HOLE X 40	2
11	2115-101	BUSH SPR LOCATOR MODEL 1 F400 MOLY FILLER NYLON (LUBRON)	1
12	2117-505	PIN SPRING PIVOT F400	1
13	2118-105	PIN CLEVIS GR5 ZP 7/16" DIA X 85mm SUIT UP TO F400	2
14	2118-504	PIVOT BOLT ASSY, 3/4" X 155MM SS F400	1
15	2140-003	WASHER F400 TYNE	1
16	2200-101	SPRING TOWER F400 100MM BEAM	1
17	2201-214	TYNE HD ASSY F400PB P/A	1
18	2200-112	RETAINING WASHER	1
19	2200-113	ROCKING PLATE F400	1
20	2201-308	PUSHROD F400/300	1

[4] Janke (Australia) reserves the right to alter the pricing of any of its products without notice.

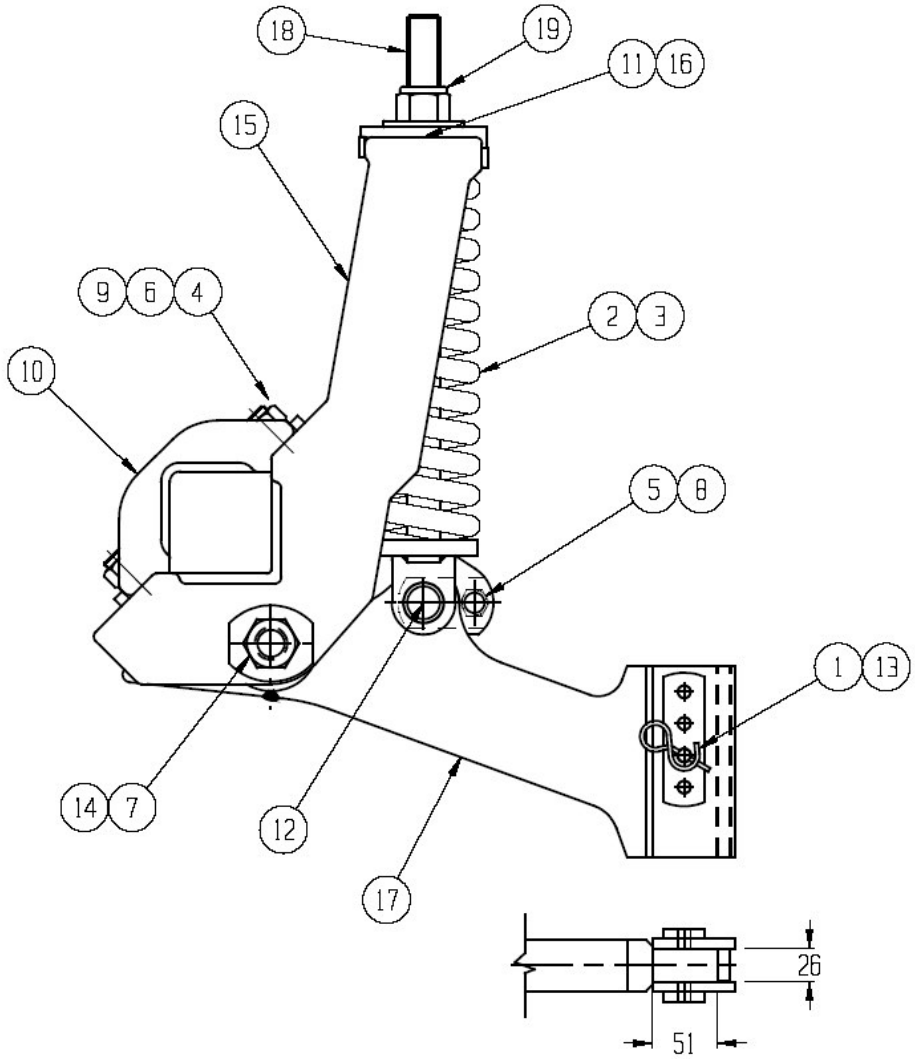

No.	PART No.	TITLE / DESCRIPTION, REFERENCE	MATERIAL / GRADE	QTY
19	2201-303	STOP NUT F500 PUSH ROD	-	1
18	2201-302	PUSH ROD ASSY F500	-	1
17	2201-202	TYNE HEAD ASSY F500 P/A	-	1
16	2201-105	ROCKING PL CLAMP HD F500	-	1
15	2201-101	CLAMP HD ASSY F500	-	1
14	2118-505	PIVOT BOLT ASSY, 1" x 179mm CHROME	-	1
13	2118-106	PIN CLEVIS GR5 ZP 1/2" x 95mm	-	1
12	2117-507	PIN PUSH ROD PIVOT F500	-	1
11	2115-001	BUSH T/BOX PUSH ROD F500	-	1
10	2101-302	CLAMP SINGLE REINF PL 100x100	-	2
9	LW80-11H	HEAVY SPRING WASHER ZP 3/4'	-	4
8	LW70-11G	MED SPRING WASHER ZP 5/8"	-	1
7	LN31-81K	NUT NYLOC ZP 1" UNC	-	1
6	LN11-81H	NUT ZP 3/4" UNC	-	4
5	LB21-51GG	SET SCREW ZP 5/8" UNC x 3/4"	-	1
4	LB11-81HK	BOLT ZP 3/4" UNC x 3 1/2"	-	4
3	L100-107	SPRING - INNER F500 52x355	-	1
2	L100-106	SPRING - OUTER F500 85x380	-	1
1	L052-501	CLIP TWIST	-	1

CHK:	REF No.	FIRST USED ON	(ASSY) PRT No. AS DRN	(ASSY) PRT No. OPP HND
	-	-	-	

DRN: S.S.
DATE : 27-11-03
SUPERSEDES -

THIS DRAWING IS THE PROPERTY OF
Janke
MOUNT TYSON QLD. AUSTRALIA
PH. 07-46 93 71 88
FX. 07-46 93 71 85
E-m. >info@janke.com.au

TITLE
TYNE UNIT

F500 100mm
S/R W/O TYNE

PRT.No. **2201-001**
SIZE **A 4L**

APPROVED:
1 -
SCALE: NON STANDARD
TYPE -
REV. -

REV.	ZONE	DESCRIPTION OF CHANGE	BY	DATE
-	-	-	-	-

	MAX.	MIN.
-	-	-

TOLERANCES UNLESS SPECIFIED

MACHINING			FABRICATION		
DIM.	+/-	0.05	DIM.	+/-	1
ANGULAR	+/-	0.05°	ANGULAR	+/-	1°
FINISH		6.4uM	HOLE CRS	+/-	0.5

UNLESS SPECIFIED
MATERIAL - STEEL TO:
AS3678/250 - (MS) PLATE/BAR/Etc
AS1163/350/C350 - RHS/SHS
AS1074 - (NB) NOMINAL BORE PIPE
AS1442/EN - 14A (HB) HOLLOW BAR

Price List for F500 Tyne Unit 2201-001

Individual Components:

No.	Part No.	Description	Qty.
1	1052-501	CLIP TWIST, 4 X 62mm	1
2	1100-106	SPRING - OUTER F500 85 X 380	1
3	1100-107	SPRING - INNER F500 52 X 355	1
4	1B11-81HK	BOLT ZP 3/4 UNC X 3 1/2"	4
5	1B21-51G6	SET SCREW ZP 5/8 UNC X 7/8"	1
6	1N11-81H	NUT ZP 3/4"UNC	4
7	1N31-81K	NUT NYLOC ZP 1" UNC	1
8	1W70-11G	WASHER SPRING MED ZP 5/8"	1
9	1W80-11H	WASHER SPRING HEAVY ZP 3/4"	4
10	2101-302	DIAG CLAMP REINF SINGLE 90/100 X 3/4" F500	2
11	2115-001	BUSH T/BOX PUSH ROD F500 MOLY FILLED NYLON	1
12	2117-507	PIN PUSH ROD PIVOT F500	1
13	2118-106	PIN CLEVIS GR5 ZP 1/2" X 95MM SUIT F500	1
14	2118-505	PIVOT BOLT ASSY, 1" X 179MM CHROME F500	1
15	2201-101	SPRING TOWER F500 100mm BEAM	1
16	2201-105	ROCKING PL CLAMP HD F500	1
17	2201-202	TYNE HEAD ASSY F500 P/A LONG	1
18	2201-302	PUSHROD ASSY F500	1
19	2201-303	STOP NUT F500 PUSHROD	1

[5] Janke (Australia) reserves the right to alter the pricing of any of its products without notice.

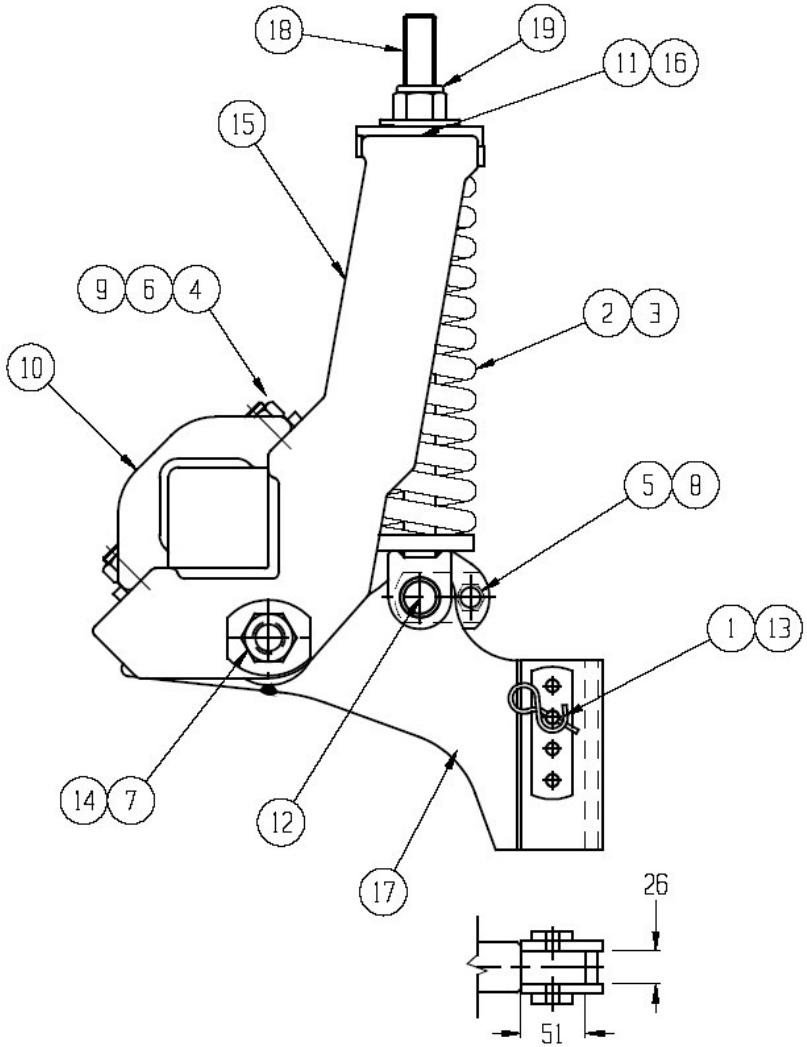

No.	PART No.	TITLE / DESCRIPTION, REFERENCE	MATERIAL / GRADE	QTY
19	2201-303	STOP NUT F500 PUSH ROD	-	1
18	2201-302	PUSH ROD ASSY F500	-	1
17	2201-212	TYNE HEAD ASSY F500 SHORT P/A	-	1
16	2201-105	ROCKING PL CLAMP HD F500	-	1
15	2201-101	CLAMP HD ASSY F500	-	1
14	2118-505	PIVOT BOLT ASSY, 1" x 179mm CHROME	-	1
13	2118-106	PIN CLEVIS GR5 ZP 1/2" x 95mm	-	1
12	2117-507	PIN PUSH ROD PIVOT F500	-	1
11	2115-001	BUSH T/BOX PUSH ROD F500	-	1
10	2101-302	CLAMP SINGLE REINF PL 100x100	-	2
9	1W80-11H	HEAVY SPRING WASHER ZP 3/4'	-	4
8	1W70-11G	MED SPRING WASHER ZP 5/8"	-	1
7	1N31-81K	NUT NYLOC ZP 1" UNC	-	1
6	1N11-81H	NUT ZP 3/4" UNC	-	4
5	1821-51G6	SET SCREW ZP 5/8" UNC x 3/4"	-	1
4	1811-81HK	BOLT ZP 3/4" UNC x 3 1/2"	-	4
3	1100-107	SPRING - INNER F500 52x355	-	1
2	1100-106	SPRING - OUTER F500 85x380	-	1
1	1052-501	CLIP TWIST	-	1

CHK:	REF No.	FIRST USED ON	(ASSY) PRT No. AS DRN	(ASSY) PRT No. OPP HND
	-	-	-	

DRN: S.S. — DATE : 27-11-03

SUPERSEDES -

THIS DRAWING IS THE PROPERTY OF Janke MOUNT TYSON QLD.AUSTRALIA

PH. 07-46 93 71 88
FX. 07-46 93 71 85
E-m. >info@janke.com.au

TITLE

TYNE UNIT

F500 SHORT 100mm

S/R W/O TYNE

PRT.No. **2201-004**

SIZE **A 4L**

APPROVED: — SCALE: 1 - NON STANDARD — TYPE - — REV. -

REV.	ZONE	DESCRIPTION OF CHANGE	BY	DATE
-	-	-	-	-

-	MAX. -	-	MAX. -
	MIN. -		MIN. -

TOLERANCES UNLESS SPECIFIED

MACHINING		FABRICATION	
DIM.	+/- 0.05	DIM.	+/- 1
ANGULAR	+/- 0.05°	ANGULAR	+/- 1°
FINISH	6.4uM	HOLE CRS	+/- 0.5

UNLESS SPECIFIED MATERIAL - STEEL TO:

AS3678/250 - (MS) PLATE/BAR/Etc
AS1163/350/C350 - RHS/SHS
AS1074 - (NB) NOMINAL BORE PIPE
AS1442/EN - 14A (HB) HOLLOW BAR

[6]

Price List for F500 Tyne Unit 2201-004

Individual Components:

No.	Part No.	Description	Qty.
1	1052-501	CLIP TWIST, 4 X 62mm	1
2	1100-106	SPRING - OUTER F500 85 X 380	1
3	1100-107	SPRING - INNER F500 52 X 355	1
4	1B11-81HK	BOLT ZP 3/4 UNC X 3 1/2"	4
5	1B21-51G6	SET SCREW ZP 5/8 UNC X 7/8"	1
6	1N11-81H	NUT ZP 3/4"UNC	4
7	1N31-81K	NUT NYLOC ZP 1" UNC	1
8	1W70-11G	WASHER SPRING MED ZP 5/8"	1
9	1W80-11H	WASHER SPRING HEAVY ZP 3/4"	4
10	2101-302	DIAG CLAMP REINF SINGLE 90/100 X 3/4" F500	2
11	2115-001	BUSH T/BOX PUSH ROD F500 MOLY FILLED NYLON	1
12	2117-507	PIN PUSH ROD PIVOT F500	1
13	2118-106	PIN CLEVIS GR5 ZP 1/2" X 95MM SUIT F500	1
14	2118-505	PIVOT BOLT ASSY, 1" X 179MM CHROME F500	1
15	2201-101	SPRING TOWER F500 100mm BEAM	1
16	2201-105	ROCKING PL CLAMP HD F500	1
17	2201-212	TYNE HD ASSY PIN ADJ F500 SHORT	1
18	2201-302	PUSHROD ASSY F500	1
19	2201-303	STOP NUT F500 PUSHROD	1

[6] Janke (Australia) reserves the right to alter the pricing of any of its product without notice.

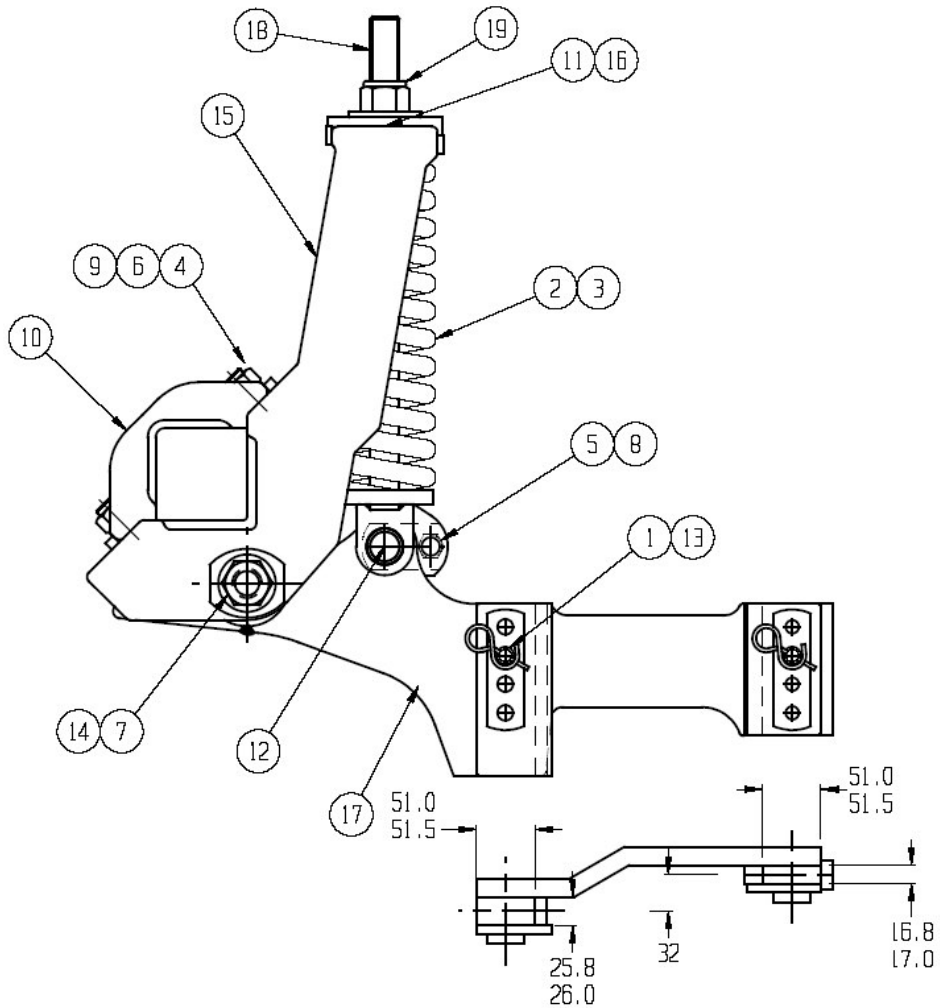

No.	PART No.	TITLE / DESCRIPTION, REFERENCE	MATERIAL / GRADE	QTY
19	2201-303	STOP NUT F500 PUSH ROD	-	1
18	2201-302	PUSH ROD ASSY F500	-	1
17	2201-213	TYNE HEAD ASSY P/B F500 P/A	-	1
16	2201-105	ROCKING PL CLAMP HD F500	-	1
15	2201-101	CLAMP HD ASSY F500	-	1
14	2118-505	PIVOT BOLT ASSY, 1" x 179mm CHROME	-	1
13	2118-106	PIN CLEVIS GR5 ZP 1/2" x 95mm	-	2
12	2117-507	PIN PUSH ROD PIVOT F500	-	1
11	2115-001	BUSH T/BOX PUSH ROD F500	-	1
10	2101-302	CLAMP SINGLE REINF PL 100x100	-	2
9	1W80-11H	HEAVY SPRING WASHER ZP 3/4'	-	4
8	1W70-11G	MED SPRING WASHER ZP 5/8"	-	1
7	1N31-81K	NUT NYLOC ZP 1" UNC	-	1
6	1N11-81H	NUT ZP 3/4" UNC	-	4
5	1B21-51G6	SET SCREW ZP 5/8" UNC x 3/4"	-	1
4	1B11-81HK	BOLT ZP 3/4" UNC x 3 1/2"	-	4
3	1100-107	SPRING - INNER F500 52x355	-	1
2	1100-106	SPRING - OUTER F500 85x380	-	1
1	1052-501	CLIP TWIST	-	2

CHK:	REF No.	FIRST USED ON	(ASSY) PRT No. AS DRN	(ASSY) PRT No. OPP HND
	-	-	-	

DRN: S.S.
DATE : 27-11-03
SUPERSEDES -

THIS DRAWING IS THE PROPERTY OF
Janke
MOUNT TYSON QLD. AUSTRALIA
PH. 07-46 93 71 88
FX. 07-46 93 71 86
E-m. >info@janke.com.au

TITLE
TYNE UNIT

F500 P/B 100mm
S/R W/O TYNE

PRT.No. **2201-005**

SIZE **A 4L**

APPROVED:
SCALE: NON STANDARD
TYPE -
REV. -

REV.	ZONE	DESCRIPTION OF CHANGE	BY	DATE
-	-	-	-	-

MAX. -
MIN. -
MAX. -
MIN. -

TOLERANCES UNLESS SPECIFIED

MACHINING		FABRICATION	
DIM.	+/- 0.05	DIM.	+/- 1
ANGULAR	+/- 0.05°	ANGULAR	+/- 1°
FINISH	6.4uM	HOLE CRS	+/- 0.5

UNLESS SPECIFIED
MATERIAL - STEEL TO:
AS3678/250 - (MS) PLATE/BAR/Etc
AS1163/350/C350 - RHS/SHS
AS1074 - (NB) NOMINAL BORE PIPE
AS1442/EN - 14A (HB) HOLLOW BAR

[7]

Price List for Tyne Unit 2201-005

Individual Components:

No.	Part No.	Description	Qty.
1	1052-501	CLIP TWIST, 4 X 62mm	2
2	1100-106	SPRING - OUTER F500 85 X 380	1
3	1100-107	SPRING - INNER F500 52 X 355	1
4	1B11-81HK	BOLT ZP 3/4 UNC X 3 1/2"	4
5	1B21-51G6	SET SCREW ZP 5/8 UNC X 7/8"	1
6	1N11-81H	NUT ZP 3/4"UNC	4
7	1N32-81K	NUT NYLOC ZP (14TPI) 1" UNF	1
8	1W70-11G	WASHER SPRING MED ZP 5/8"	1
9	1W80-11H	WASHER SPRING HEAVY ZP 3/4"	4
10	2101-302	DIAG CLAMP REINF SINGLE 90/100 X 3/4" F500	2
11	2115-001	BUSH T/BOX PUSH ROD F500 MOLYFILLED NYLON	1
12	2117-507	PIN PUSH ROD PIVOT F500	1
13	2118-106	PIN CLEVIS GR5 ZP 1/2" X 95MM SUIT F500	2
14	2118-505	PIVOT BOLT ASSY, 1" X 179MM CHROME F500	1
15	2201-101	SPRING TOWER F500 100mm BEAM	1
16	2201-105	ROCKING PL CLAMP HD F500	1
17	2201-213	TYNE HD ASSY F500PB P/A	1
18	2201-302	PUSHROD ASSY F500	1
19	2201-303	STOP NUT F500 PUSHROD	1

[7] Janke (Australia) reserves the right to alter the pricing of any of its products without notice.

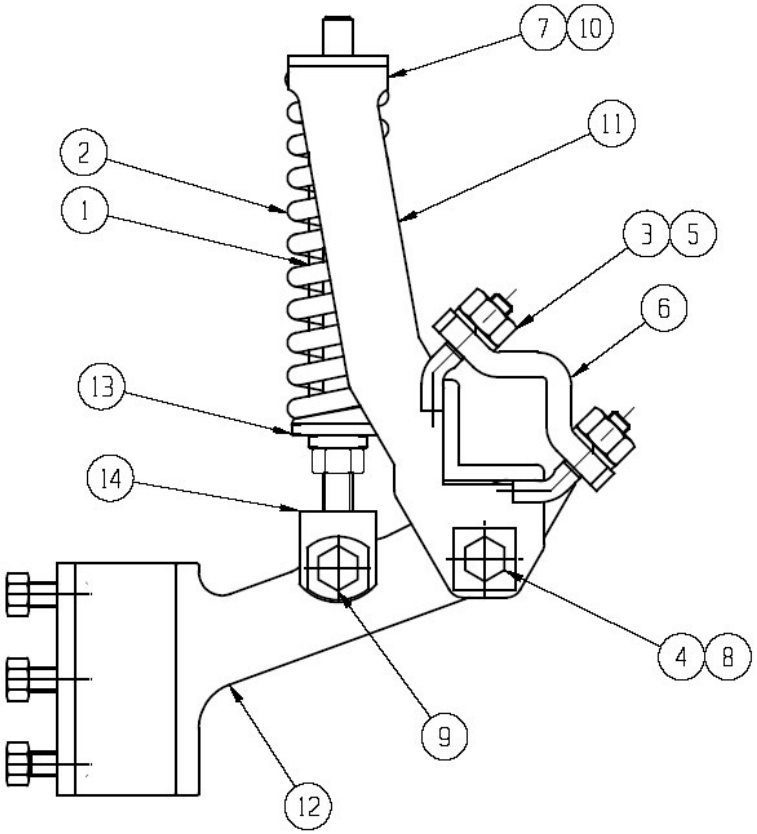

No.	PART No.	TITLE / DESCRIPTION, REFERENCE	MATERIAL / GRADE	QTY
14	2201-311	PUSHROD ASSY F200	-	1
13	2201-304	WASHER SPR RETAINER F200	-	1
12	2201-207	TYNE HD F200 HC VERT SCREW ADJ	-	1
11	2201-125	CLAMP HD F200 2" - 2 1/2"	-	1
10	2140-005	WASHER (CROPPED) F200	-	1
9	2118-507	PIN PIVOT BOLT 5/8" x 104mm SS	-	1
8	2118-501	PIN PIVOT BOLT 5/8" x 143mm SS	-	1
7	2115-101	BUSH SPR LOCATOR MODEL 1 F400	-	1
6	2101-011	DIAGONAL CLAMP 50/65 RHS 5/8" HOLE	-	2
5	1W70-11G	WASHER SPRING MED ZP 5/8"	-	4
4	1N31-81G	NUT NYLOC ZP 5/8" UNC	-	2
3	1N11-81G	NUT ZP 5/8" UNC	-	4
2	1100-104	SPRING - OUTER F250	-	1
1	1100-103	SPRING - INNER F250	-	1

CHK:	REF No. -	FIRST USED ON -	(ASSY) PRT No. AS DRN -	(ASSY) PRT No.OPP HND
DRN: S.S.	DATE : 2/7/03	THIS DRAWING IS THE PROPERTY OF Janke MOUNT TYSON QLD.AUSTRALIA	PH. 07-46 93 71 88 FX. 07-46 93 71 85 E-m. >info@janke.com.au	
SUPERSEDES -				

TITLE

TYNE ASSY - F200

2" - 2 1/2"

BEAM

PRT.No. **2201-008**

SIZE **A 4L**

APPROVED: 1 - SCALE: NON STANDARD TYPE - REV. -

REV.	ZONE	DESCRIPTION OF CHANGE	BY	DATE
-	-	-	-	-

-	MAX.-	-	MAX.-
	MIN.-		MIN.-

TOLERANCES UNLESS SPECIFIED

MACHINING			FABRICATION		
DIM.	+/-	0.05	DIM.	+/-	1
ANGULAR	+/-	0.05°	ANGULAR	+/-	1°
FINISH		6.4uM	HOLE CRS	+/-	0.5

UNLESS SPECIFIED
MATERIAL - STEEL TO:

AS3678/250 - (MS) PLATE/BAR/Etc
AS1163/350/C350 - RHS/SHS
AS1074 - (NB) NOMINAL BORE PIPE
AS1442/EN - 14A (HB) HOLLOW BAR

Price List for Tyne Unit F200, 2201-008

Individual Components:[8]

No.	Part No.	Description	Qty.
1	1100-103	SPRING - INNER F250	1
2	1100-104	SPRING - OUTER F250	1
3	1N11-81G	NUT ZP 5/8"UNC	4
4	1N31-81G	NUT NYLOC ZP 5/8"UNC	2
5	1W70-11G	WASHER SPRING MED ZP 5/8"	4
6	2101-011	DIAGONAL CLAMP 50/65 RHS 5/8 HOLE X 40	2
7	2115-101	BUSH SPR LOCATOR MODEL 1 F400 MOLYFILLED NYLON (LUBRON)	1
8	2118-501	PIVOT PIN ASSY, 5/8" X 143MM SS F250	1
9	2118-507	PIVOT BOLT ASSY, 5/8" X 104MM SS IFPW & F250	1
10	2140-005	WASHER MODIFIED 003 2 FLATS F200	1
11	2201-125	CLAMP HD F200 2-2 1/2"	1
12	2201-207	TYNE HD F200 HC VERT S/A	1
13	2201-304	WASHER SPR RETAINER F200	1
14	2201-311	PUSHROD ASSY F200	1

[8] Janke (Australia) reserves the right to alter the pricing of any of its products without notice.

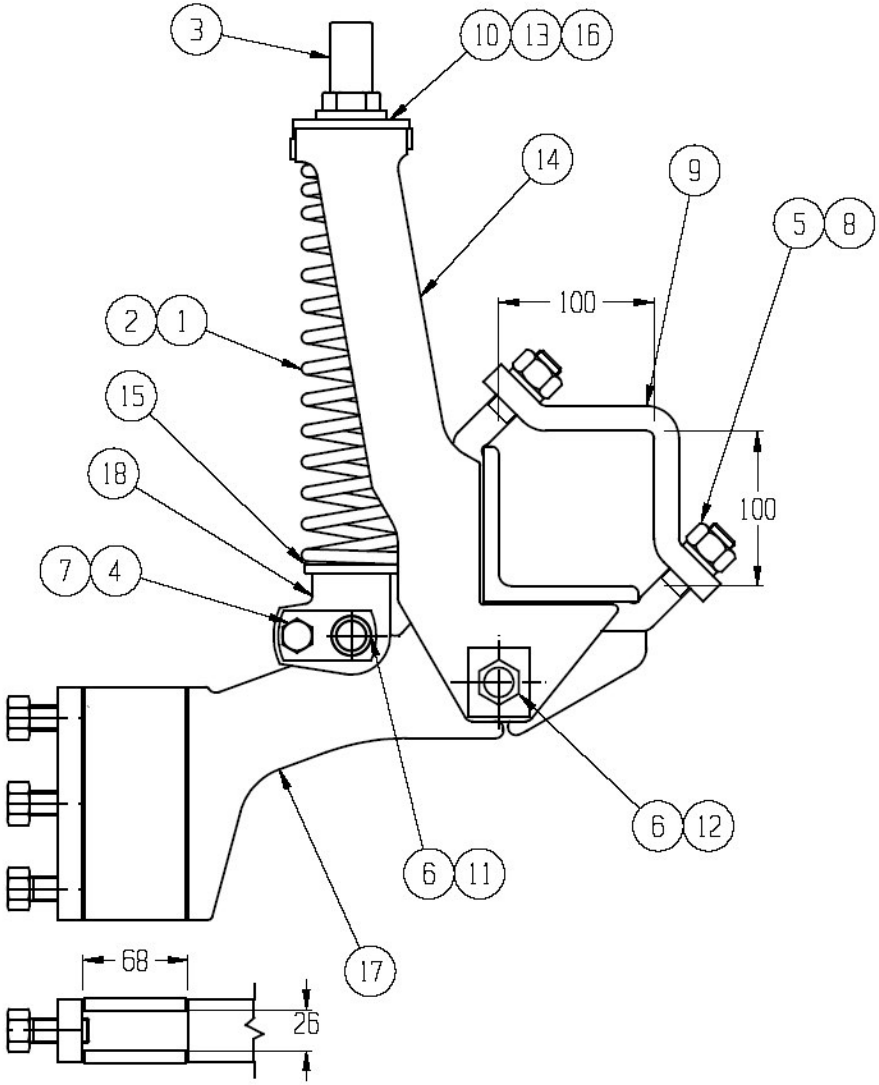

CADKEY PRT.No.	2201-022	SUPERSEDES - / SUPERSEDED BY -	REV. —
TITLE	TYNE UNIT F300	SPRING RELEASE 100mm BEAM / SUIT 50 x 16 TYNE	
DRN.: S.S.	DATE: 02 DEC 03	FIRST USED ON -	(ASSY) PART No. AS DRN - / (ASSY) PART No. OPP HAND -
JOB No. -	REF.No -	THIS DRAWING IS THE PROPERTY OF JANKE MOUNT TYSON QLD. AUSTRALIA	
CLIENT -	CHK:		
SHEET 1 OF 1	APPROVED	SCALE: NON STANDARD / TYPE —	SIZE A3

No.	PART No.	MATERIAL / DESCRIPTION	MATERIAL / GRADE	QTY
1	1100-101	SPRING - INNER F300/400	-	1
2	1100-102	SPRING - OUTER F300/400	-	1
3	1601-001	CAP, THREAD PROTECTING	-	1
4	1821-81E6	SET SCREW ZP 1/2 UNC X 3/4	-	1
5	1N11-81H	NUT ZP 3/4"*UNC	-	4
6	1N31-81H	NUT NYLOC ZP 3/4"*UNC	-	2
7	1W70-11E	WASHER SPRING MED ZP 1/2	-	1
8	1W70-11H	WASHER SPRING HEAVY ZP 3/4"	-	4
9	2101-016	DIAG CLAMP 90/100 RHS 3/4 HOLE	-	2
10	2115-101	BUSH SPRING LOCATOR	-	1
11	2117-305	PIVOT PIN SPRING PIVOT	-	1
12	2118-504	PIVOT BOLT ASSY, 3/4" x 195MM SS	-	1
13	2140-003	WASHER TYNE	-	1
14	2200-101	SPR RELEASE BKT F300/400 100mm BEAM	-	1
15	2200-112	RETAINING WASHER	-	1
16	2200-113	ROCKING PLATE	-	1
17	2201-219	TYNE HD ASSY F300 STUD ADJ	-	1
18	2201-308	PUSHROD F400/300	-	1

CADKEY PRT.No. 2201-022

UNLESS OTHERWISE SPECIFIED TOLERANCES

FABRICATION: ANGULAR +/- 1° — DIM. +/- 1 — HOLE CRS +/- 0.5

MACHINING: ANGULAR +/- 0.05° — DIM. +/- 0.05 — FINISH 6.4uM

UNLESS OTHERWISE SPECIFIED MATERIAL - STEEL TO:

AS3678/250 - (MS) PLATE/BAR/Etc — AS1074 - (NB) NOMINAL BORE PIPE

AS1163/350/C350 - RHS/SHS — AS1442/EN - 14A (HB) HOLLOW BAR

REV.	ZONE	DESCRIPTION	BY	DATE	REV.	ZONE	DESCRIPTION	BY	DATE
-	-	-	-	-	-	-	-	-	-
-	-	-	-	-	-	-	-	-	-

[9]

Price List for Tyne Unit F300
2201-022

Individual Components:

No.	Part No.	Description	Qty.
1	1100-101	SPRING - INNER F400	1
2	1100-102	SPRING - OUTER F400	1
3	1601-001	CAP, THREAD PROTECTING - F400	1
4	1B21-81E6	SET SCREW ZP 1/2 UNC X 3/4"	1
5	1N11-81H	NUT ZP 3/4"UNC	4
6	1N31-81H	NUT NYLOC ZP 3/4"UNC	2
7	1W70-11E	WASHER SPRING MED ZP 1/2"	1
8	1W80-11H	WASHER SPRING HEAVY ZP 3/4"	4
9	2101-016	DIAGONAL CLAMP 90/100 RHS 3/4 HOLE X 40	2
10	2115-101	BUSH SPR LOCATOR MODEL 1 F400 MOLY FILLED NYLON (LUBRON)	1
11	2117-505	PIN SPRING PIVOT F400	1
12	2118-504	PIVOT BOLT ASSY, 3/4" X 155MM SS F400	1
13	2140-003	WASHER F400 TYNE	1
14	2200-101	SPRING TOWER F400 100MM BEAM	1
15	2200-112	RETAINING WASHER	1
16	2200-113	ROCKING PLATE F400	1
17	2201-219	TYNE HD ASSY F300 STUD ADJ	1
18	2201-308	PUSHROD F400/300	1

[9] Janke (Australia) reserves the right to alter the pricing of any of its products without notice.

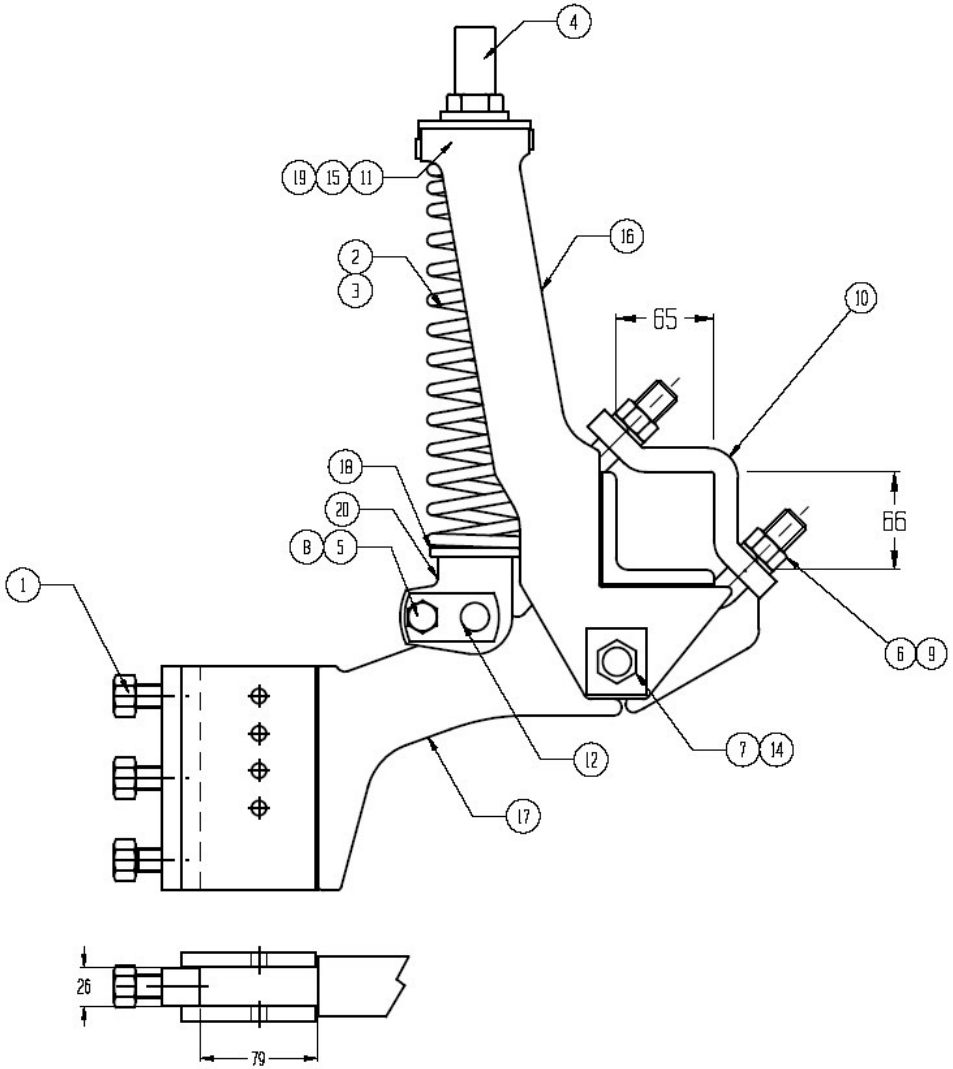

CADKEY PRT.No.	2201-038
SUPERSEDES	-
SUPERSEDED BY	-
REV.	—
TITLE	TYNE UNIT F400
	SPRING RELEASE 75mm BEAM
	SUIT 75 x 25 TYNE
DRN.: G.S.	DATE: 16-06-04
FIRST USED ON	-
(ASSY) PART No. AS DRN	-
(ASSY) PART No. OPP HAND	-
JOB No.: -	REF. No: -
CLIENT: -	CHK:
THIS DRAWING IS THE PROPERTY OF	JANKE, MOUNT TYSON QLD. AUSTRALIA
SHEET 1 OF 1	APPROVED
SCALE: NON STANDARD	TYPE -
SIZE	A3

No.	PART No.	MATERIAL / DESCRIPTION	MATERIAL / GRADE	QTY
1	1B11-B0H8	BOLT BLACK 3/4 UNC X 1 1/2"	-	3
2	1L00-L01	SPRING - INNER F400	-	1
3	1L00-L02	SPRING - OUTER F400	-	1
4	1G01-D01	CAP, THREAD PROTECTING - F400	-	1
5	1B21-B1E6	SET SCREW ZP 1/2 UNC X 3/4	-	1
6	1N11-B1H	NUT ZP 3/4"-UNC	-	4
7	1N31-B1H	NUT NYLOC ZP 3/4"-UNC	-	2
8	1W70-L1E	WASHER SPRING MED ZP 1/2	-	1
9	1W80-L1H	WASHER SPRING HEAVY ZP 3/4"	-	4
10	2L01-D15	DIAG CLAMP 65/75 RHS 3/4 HOLE	-	2
11	2L15-L01	BUSH SPR LOCATOR F400	-	1
12	2L17-S05	PIVOT PIN F400 SPRING PIVOT	-	1
13	-	-	-	-
14	2L18-S04	PIVOT BOLT ASSY, 3/4" x 155MM SS	-	1
15	2L40-D03	WASHER F400 TYNE	-	1
16	2201-L13	SPR RELEASE BKT F400 75mm BEAM	-	1
17	2201-243	TYNE HD F400 S/A 75 x 25 TYNE	-	1
18	2200-L12	RETAINING WASHER	-	1
19	2200-L13	ROCKING PLATE F400	-	1
20	2201-308	PUSHROD F400/300	-	1

CADKEY PRT.No. 2201-038

UNLESS OTHERWISE SPECIFIED TOLERANCES

FABRICATION ANGULAR +/- 1° MACHINING ANGULAR +/- 0.05°
DIM. +/- 1 HOLE CRS +/- 0.5 DIM. +/- 0.05 FINISH 6.4µM

UNLESS OTHERWISE SPECIFIED MATERIAL - STEEL TO:

AS3678/250 - (MS) PLATE/BAR/Etc AS1074 - (NB) NOMINAL BORE PIPE
AS1163/350/C350 - RHS/SHS AS1442/EN - 14A (HB) HOLLOW BAR

REV.	ZONE	DESCRIPTION	BY	DATE	REV.	ZONE	DESCRIPTION	BY	DATE
-	-	-	-	-	-	-	-	-	-
-	-	-	-	-	-	-	-	-	-

[10]

Price List for F400 Tyne Unit 2201-038

Individual Components:

No.	Part No.	Description	Qty.
1	1B11-80HB	BOLT BLACK 3/4 UNC x 1 1/2"	3
2	1100-101	SPRING - INNER F400	1
3	1100-102	SPRING - OUTER F400	1
4	1601-001	CAP, THREAD PROTECTING - F400	1
5	1B21-81E6	SET SCREW ZP 1/2 UNC X 3/4"	1
6	1N11-81H	NUT ZP 3/4"UNC	4
7	1N31-81H	NUT NYLOC ZP 3/4"UNC	1
8	1W70-11E	WASHER SPRING MED ZP 1/2"	1
9	1W80-11H	WASHER SPRING HEAVY ZP 3/4"	4
10	2101-015	DIAGONAL CLAMP 65/75 RHS 3/4 HOLE X 40	2
11	2115-101	BUSH SPR LOCATOR MODEL 1 F400 MOLY FILLED NYLON (LUBRON)	1
12	2117-505	PIN SPRING PIVOT F400	1
13	-	-	-
14	2118-504	PIVOT BOLT ASSY, 3/4" X 155MM SS F400	1
15	2140-003	WASHER F400 TYNE	1
16	2201-113	SPRING TOWER F400 75mm BEAM	1
17	2201-243	TYNE HD F400 75 x 25 S/ADJ WITH BUSHES	1
18	2200-112	RETAINING WASHER	1
19	2200-113	ROCKING PLATE F400	1
20	2201-308	PUSHROD F400/300	1

[10] Janke (Australia) reserves the right to alter the price of any of its products without notice.

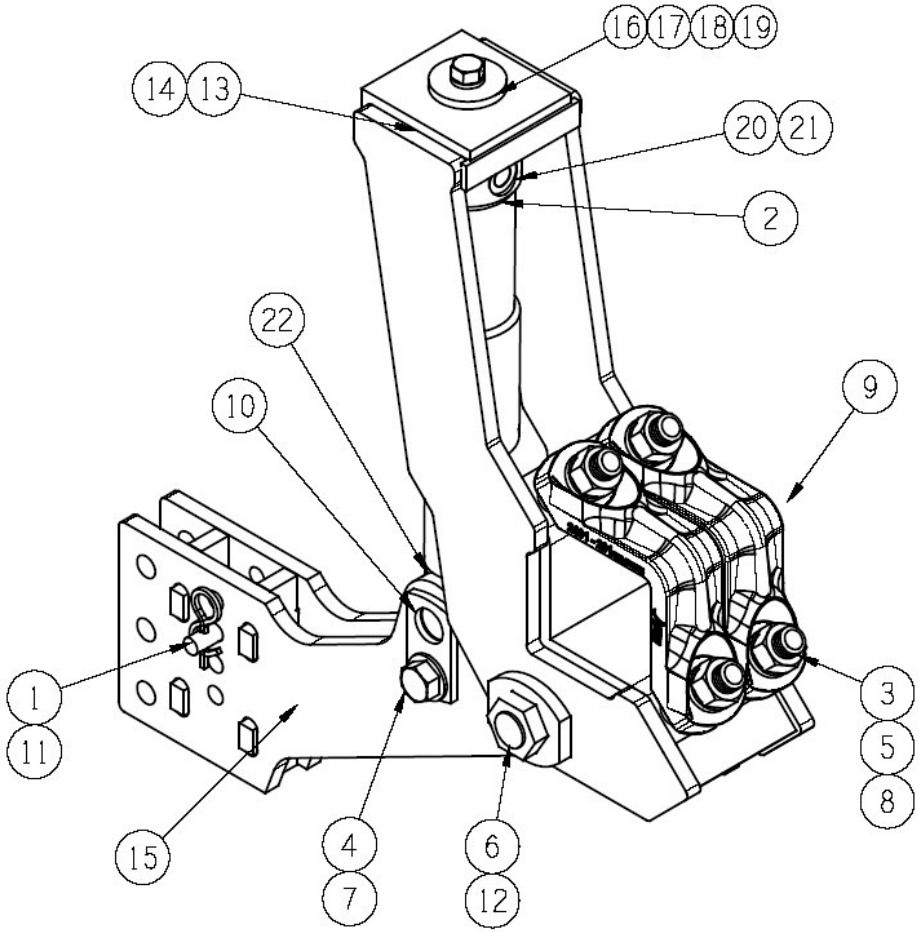

WEIGHT: 36.6KG

No.	PART No.	TITLE / DESCRIPTION, REFERENCE	MATERIAL / GRADE	QTY
22	2115-004	BUSH TYNE HEAD PIVOT F500	-	1
21	1507-438	CAP NUT 9/16" JIC	-	1
20	1507-425	NIPPLE 9/16" JICM 9/16" UNOM	-	1
19	1W70-11E	WASHER SPRING 1/2" ZP	-	1
18	1821-81EB	SET SCREW ZP 1/2" UNC x 1" LONG	-	1
17	1501-134	DOMED BEARING RING	-	1
16	1501-133	WASHER 50 OD x 13 ID x 6mm	-	1
15	2202-101	F850 TYNE HEAD TWIN PLATE	-	1
14	2201-105	ROCKING PLATE CLAMP	-	1
13	2201-101	SPRING TOWER	-	1
12	211B-505	PIVOT BOLT CHROME 1" x 179 LONG	-	1
11	211B-106	PIN CLEVIS GR5 ZP 1/2" x 95	-	1
10	2117-507	PIN	-	1
9	2101-201	DIAG CLAMP REINF 90/100 x 3/4"	-	2
8	1W80-11H	SPRING WASHER ZP 3/4"	-	4
7	1W70-11G	SPRING WASHER ZP 5/8"	-	1
6	1N31-81K	NUT NYLOC ZP 1" UNC	-	1
5	1N11-81H	NUT ZP 3/4" UNC	-	4
4	1821-51GG	SET SCREW ZP 5/8" UNC x 3/4"	-	1
3	1811-81HK	BOLT XP 3/4" UNC x 3 1/2"	-	4
2	1501-030	HYD TYNE CYLINDER F1000 (F850)	-	1
1	1052-501	CLIP TWIST 4mm	-	1

CHK:	REF No.	FIRST USED ON	(ASSY) PRT No. AS DRN	(ASSY) PRT No. OPP HND
	-	-	-	

DRN: JL — DATE : 21-2-05

SUPERSEDES: -

THIS DRAWING IS THE PROPERTY OF Janke MOUNT TYSON QLD. AUSTRALIA

PH. 07-46 93 71 88
FX. 07-46 93 71 85
E-m. >info@janke.com.au

TITLE

TYNE UNIT

HYD F800 100mm

W/O TYNE

PRT.No. **2202-001**

SIZE **A 4L**

APPROVED: 1 - SCALE: NON STANDARD TYPE - REV. -

REV.	ZONE	DESCRIPTION OF CHANGE	BY	DATE
-	-	-	-	-

MAX. - MIN. - MAX. - MIN. -

TOLERANCES UNLESS SPECIFIED

MACHINING			FABRICATION		
DIM.	+/-	0.05	DIM.	+/-	1
ANGULAR	+/-	0.05°	ANGULAR	+/-	1°
FINISH		6.4uM	HOLE CRS	+/-	0.5

UNLESS SPECIFIED MATERIAL - STEEL TO:

AS3678/250 - (MS) PLATE/BAR/Etc
AS1163/350/C350 - RHS/SHS
AS1074 - (NB) NOMINAL BORE PIPE
AS1442/EN - 14A (HB) HOLLOW BAR

Price List for F500 Hyd. Tyne Unit 2202-001

[11]

Individual Components:

No.	Part No.	Description	Qty.
1	1052-501	CLIP TWIST, 4 X 62mm	1
2	1501-030	HYD TYNE CYLINDER F800 - MACHINED/WELDED	1
3	1B11-81HK	BOLT ZP 3/4 UNC X 3 1/2"	4
4	1B21-51G6	SET SCREW ZP 5/8 UNC X 7/8"	1
5	1N11-81H	NUT ZP 3/4"UNC	4
6	1N31-81K	NUT NYLOC ZP 1" UNC	1
7	1W70-11G	WASHER SPRING MED ZP 5/8"	1
8	1W80-11H	WASHER SPRING HEAVY ZP 3/4"	4
9	2101-201	CLAMP DIAGONAL CAST 100mm BEAM SUIT F500	2
10	2117-507	PIN PUSH ROD PIVOT F500	1
11	2118-106	PIN CLEVIS GR5 ZP 1/2" X 95MM SUIT F500	1
12	2118-505	PIVOT BOLT ASSY, 1" X 179MM CHROME F500	1
13	2201-101	SPRING TOWER F500 100mm BEAM	1
14	2201-105	ROCKING PL CLAMP HD F500	1
15	2202-101	F850 TYNE HD TWIN PLATE	1
16	1501-133	WASHER 50 OD x 13 ID x 6mm	1
17	1501-134	BEARING RING F800	1
18	1B21-81E8	SET SCREW ZP 1/2 UNC X 1"	1
19	1W70-11E	WASHER SPRING MED ZP 1/2"	1
20	1507-425	NIPPLE 9/16" JICM 9/16" UNOM	1
21	1507-438	CAP NUT 9/16" JIC	1
22	2115-004	BUSH TYNE HEAD PIVOT	1

[11] Janke (Australia) reserves the right to alter the pricing of any of its products without notice.

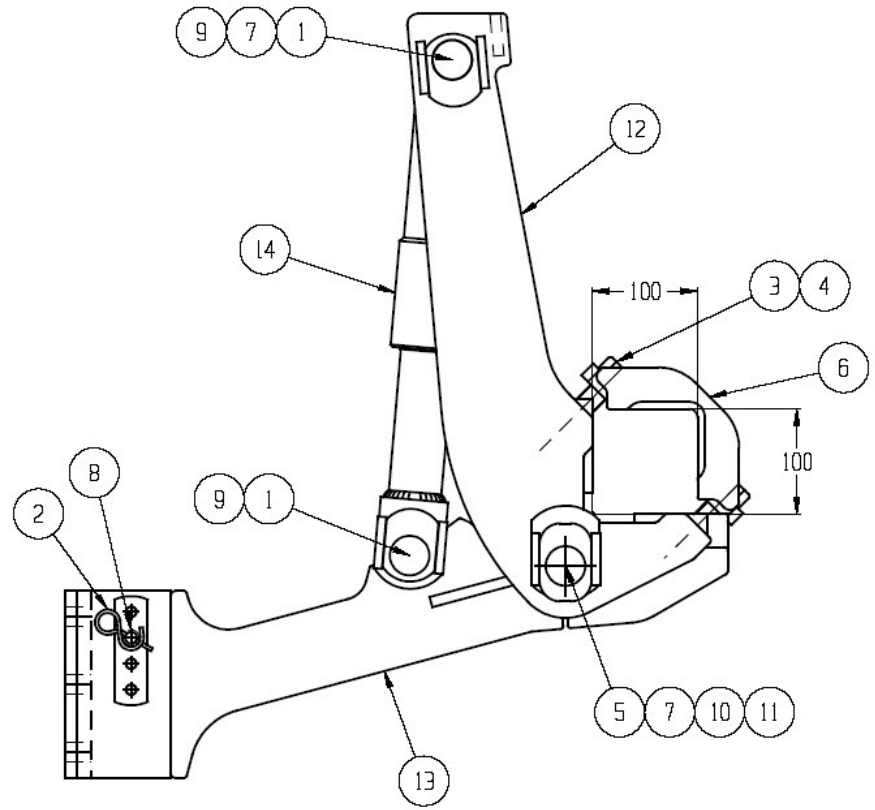

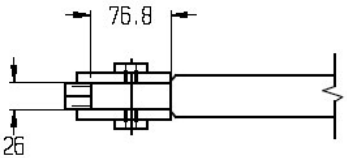

No.	PART No.	TITLE / DESCRIPTION, REFERENCE	MATERIAL / GRADE	QTY
14	2900-001	CYLINDER HYDRAULIC RECOIL	-	1
13	2203-201	TYNE HEAD ASSEMBLY	-	1
12	2203-103	CLAMP HEAD ASSEMBLY	-	1
11	2140-006	WASHER	-	1
10	211B-506	PIN - TYNE HEAD PIVOT	-	1
9	211B-108	PIN - HYD CYL PIVOT	-	2
8	211B-106	PIN	-	1
7	2115-012	BUSH	-	4
6	2101-301	DIAG. CLAMP DUAL REINFORCED	-	2
5	1N32-51K	NUT NYLOC 1" UNC	-	1
4	1N14-TOH	NUT M20	GR 12	4
3	1B34-TOHL	BOLT BLK M20 x 90 CAP SCREW	GR 12	4
2	1052-501	RETAINER SPRING CLIP	-	1
1	1050-205	LYNCH PIN 11 x 50mm	-	2

CHK:	REF No.	FIRST USED ON	(ASSY) PRT No. AS DRN	(ASSY) PRT No.OPP HND
	-	-	-	

DRN: S.S.
DATE : 6/4/04
SUPERSEDES -

THIS DRAWING IS THE PROPERTY OF
Janke
MOUNT TYSON QLD.AUSTRALIA
PH. 07-46 93 71 88
FX. 07-46 93 71 85
E-m. >info@janke.com.au

TITLE
HYDRAULIC RELEASE UNIT
F1500

PRT.No. 2203-001
SIZE A 4L

APPROVED: | 1 - | SCALE: NON STANDARD | TYPE - | REV. -

REV.	ZONE	DESCRIPTION OF CHANGE	BY	DATE
-	-	-	-	-

-	MAX.-	-	MAX.-
	MIN.-		MIN.-

TOLERANCES UNLESS SPECIFIED

MACHINING		FABRICATION	
DIM.	+/- 0.05	DIM.	+/- 1
ANGULAR	+/- 0.05°	ANGULAR	+/- 1°
FINISH	6.4uM	HOLE CRS	+/- 0.5

UNLESS SPECIFIED
MATERIAL - STEEL TO:
AS3678/250 - (MS) PLATE/BAR/Etc
AS1163/350/C350 - RHS/SHS
AS1074 - (NB) NOMINAL BORE PIPE
AS1442/EN - 14A (HB) HOLLOW BAR

[12]

Price List for Hydraulic Release Unit 2203-001

Individual Components:

No.	Part No.	Description	Qty.
1	1050-205	LYNCH PIN 11 x 50mm	2
2	1052-501	RETAINER SPRING CLIP	1
3	1B34-T0HL	BOLT BLK M20 x 90 CAP SCREW	4
4	1N14-T0H	NUT BLACK CL 10.9 M20	4
5	1N31-81K	NUT NYLOC ZP 1" UNC	1
6	2101-301	DIAG CLAMP DUAL REINFORCED	2
7	2115-012	BUSH	4
8	2118-106	PIN CLEVIS GR5 ZP	1
9	2118-108	PIN HYD. CYL. PIVOT	2
10	2118-506	PIN- TYNE HEAD PIVOT	1
11	2140-006	WASHER	1
12	2203-103	CLAMP ASSY F1500	1
13	2203-201	TYNE HD ASSY F1500 PIN ADJ	1
14	2900-001	CYLINDER HYDRAULIC RECOIL	1

[12] Janke (Australia) reserves the right to alter the pricing of any of its products without notice.